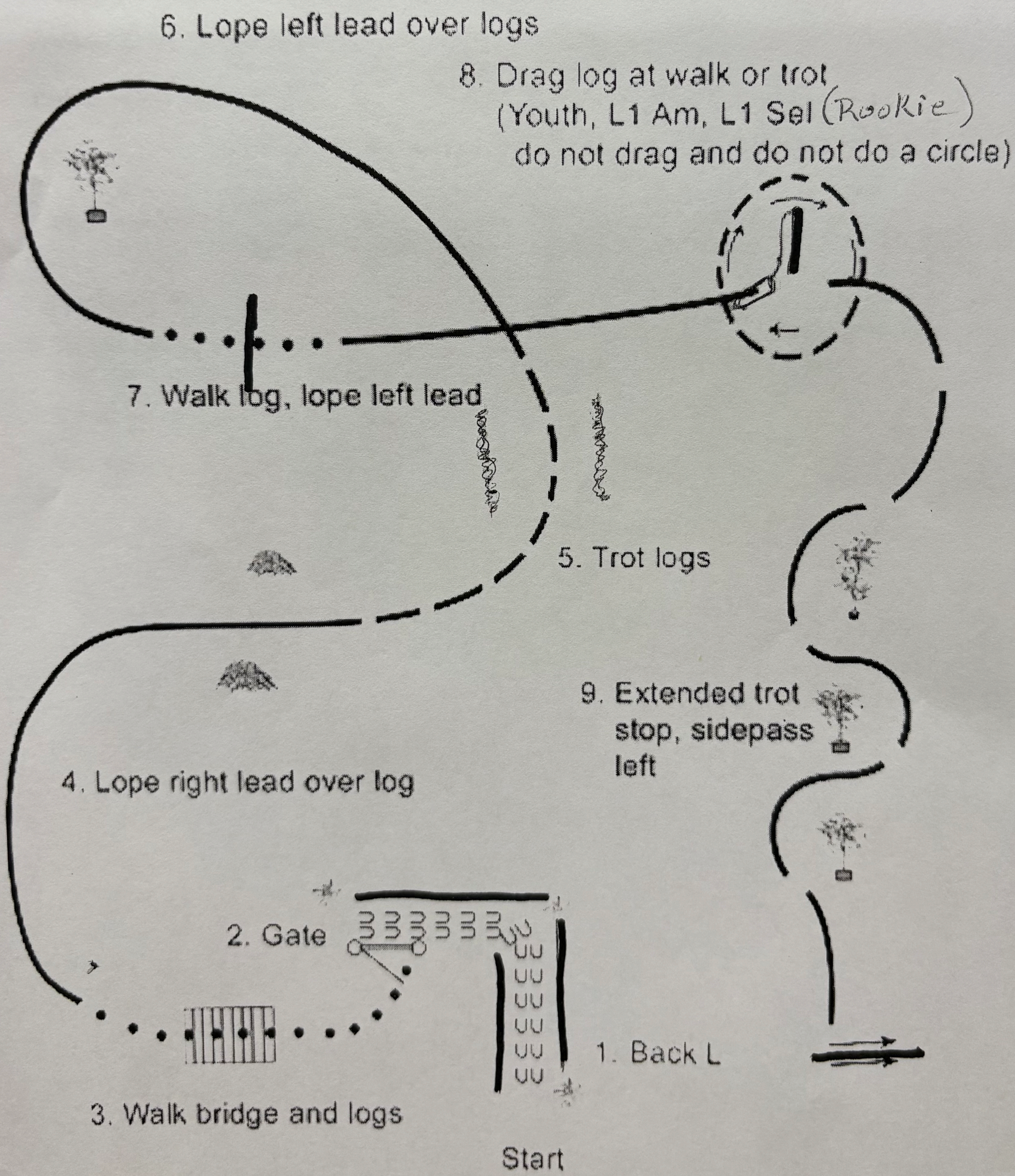
6. Lope left lead over logs
8. Drag log at walk or trot
(Youth, L1 Am, L1 Sel (Rookie)
do not drag and do not do a circle)
7. Walk log, lope left lead
5. Trot logs
9. Extended trot
stop, sidepass
left
4. Lope right lead over log
2. Gate
1. Back L
3. Walk bridge and logs
Start

RANCH RIDING - PATTERN 9

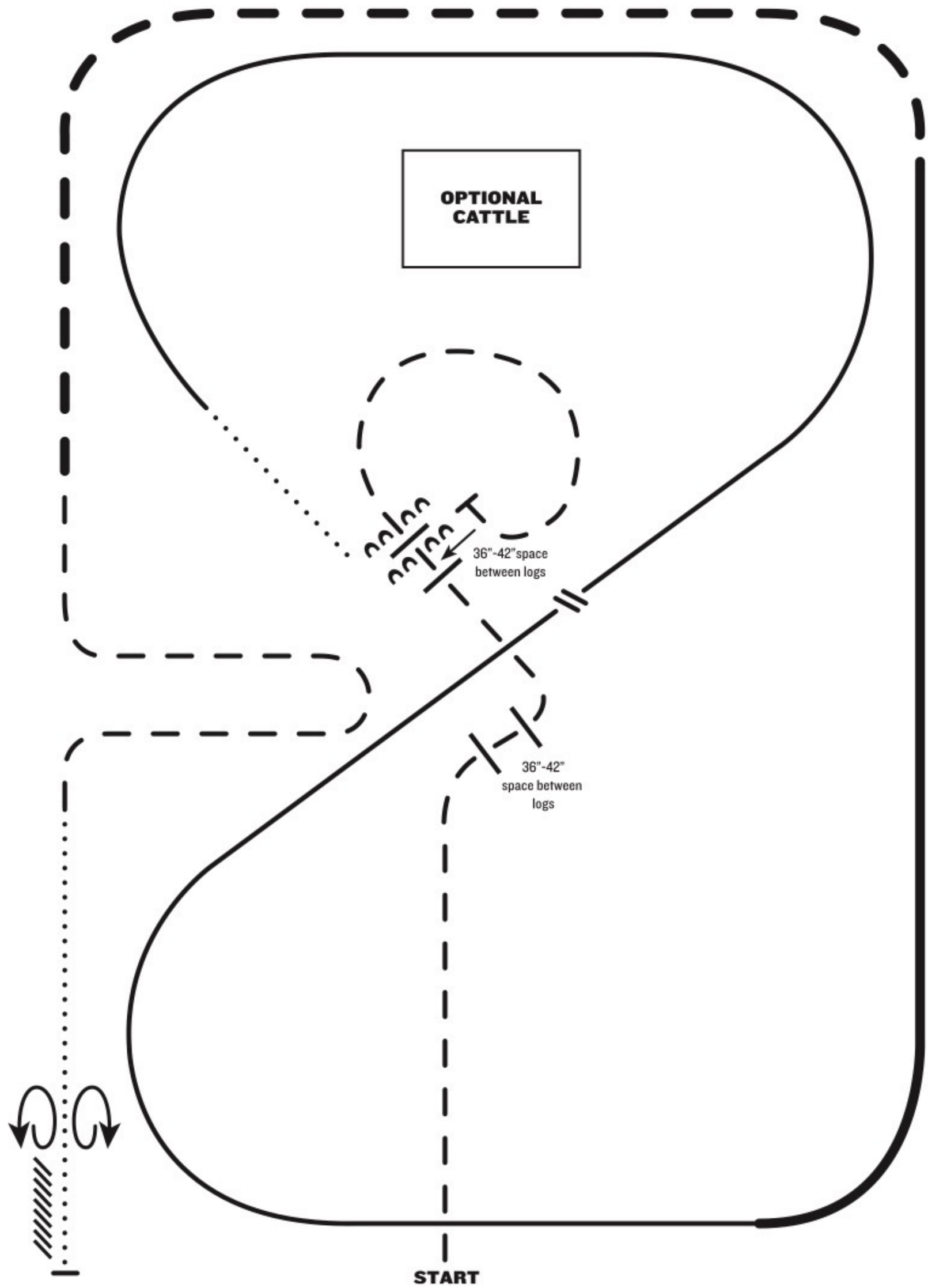

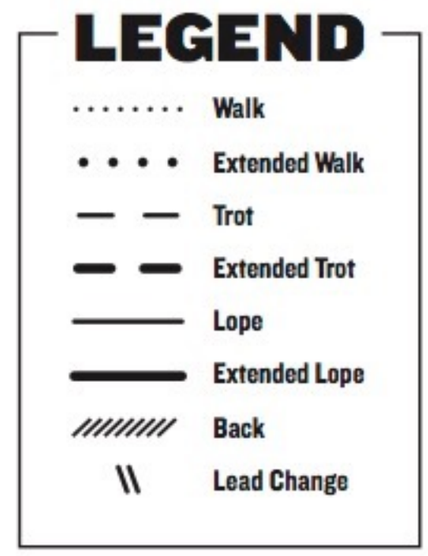

1. Trot
2. Trot over two sets of logs
3. Trot circle, stop and side pass left over log
4. Walk
5. Lope right lead
6. Change leads (simple or flying)
7. Lope left lead
8. Extended lope left lead
9. Extended trot
10. Trot
11. Walk
12. Stop and back
13. 360° turn each direction (either direction 1st) (L-R or R-L)

Note: The drawn description of this pattern is only intended for the general depiction of the pattern. Exhibitors should utilize the arena space to best exhibit their horses.

Revised 05-2021

VRH AND RHC RANCH REINING PATTERN 7

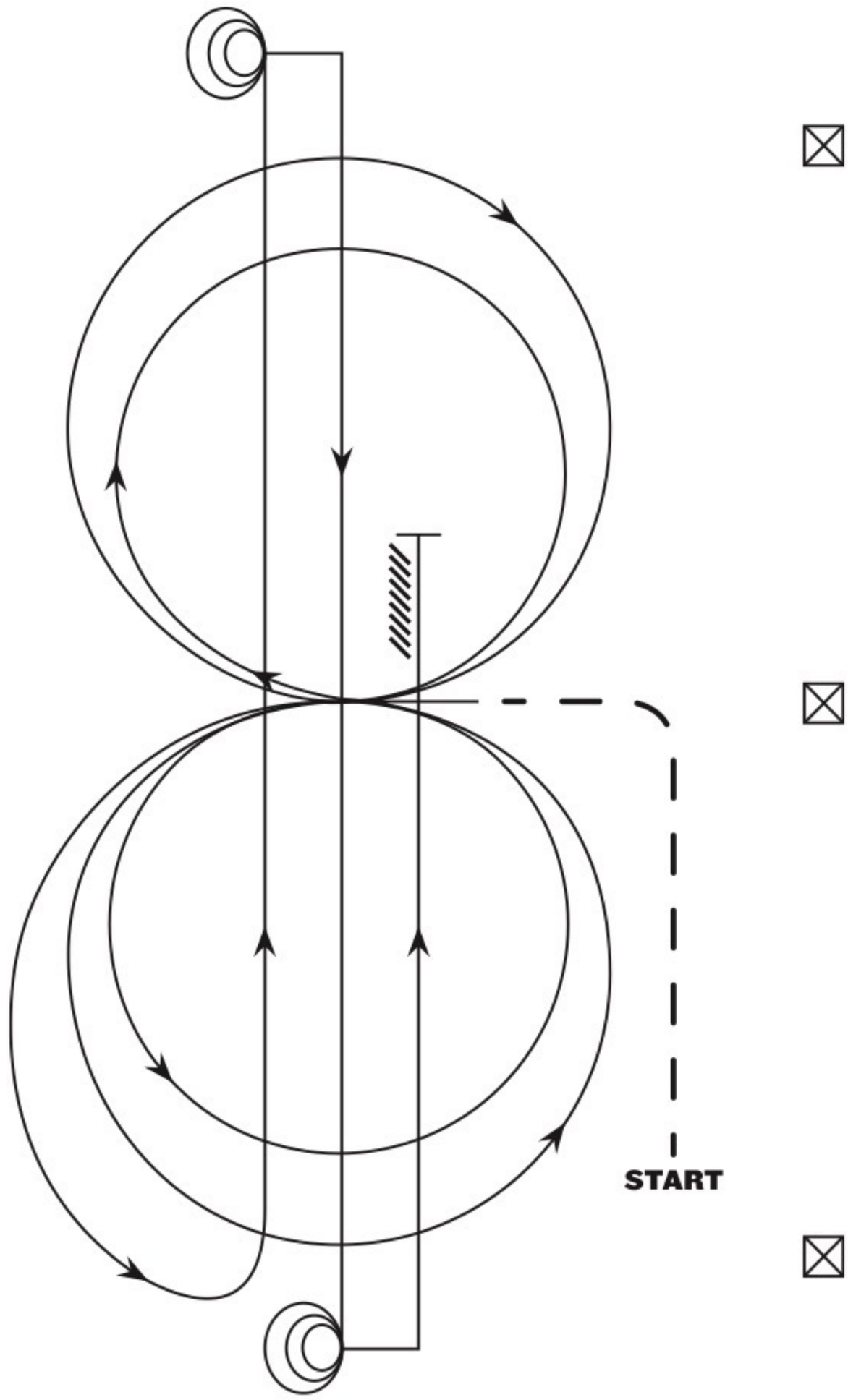

Mandatory Marker along Fence or Wall: The judge shall indicate with markers on arena wall or fence the center of pattern. Judge shall also place markers on fence or wall at least 50' from each end of the arena.

Ride pattern as follows: Trot to center of arena and stop or walk before departure. Start pattern facing toward judge.

1. Beginning on left lead, complete two circles to the left - the first one large and fast, the second one small and slow. Change leads at center of arena.
2. Complete two circles to the right - the first one large and fast, the second one small and slow. Change leads at center of arena.
3. Begin a circle to the left, but do not close this circle. Continuing around the end of arena, run up the center, past end marker, and do a sliding stop.
4. Complete 3 1/2 spins to the left.
5. Run down to other end of arena, past the end marker, and do a sliding stop.
6. Complete 3 1/2 spins to the right.
7. Run past the center marker and do a sliding stop. Back at least 10 feet. Hesitate to show completion pattern

Revised 06-07-2021

NRCHA
NATIONAL REINED COW HORSE ASSOCIATION

PATTERN 3
LOPE TOWARD

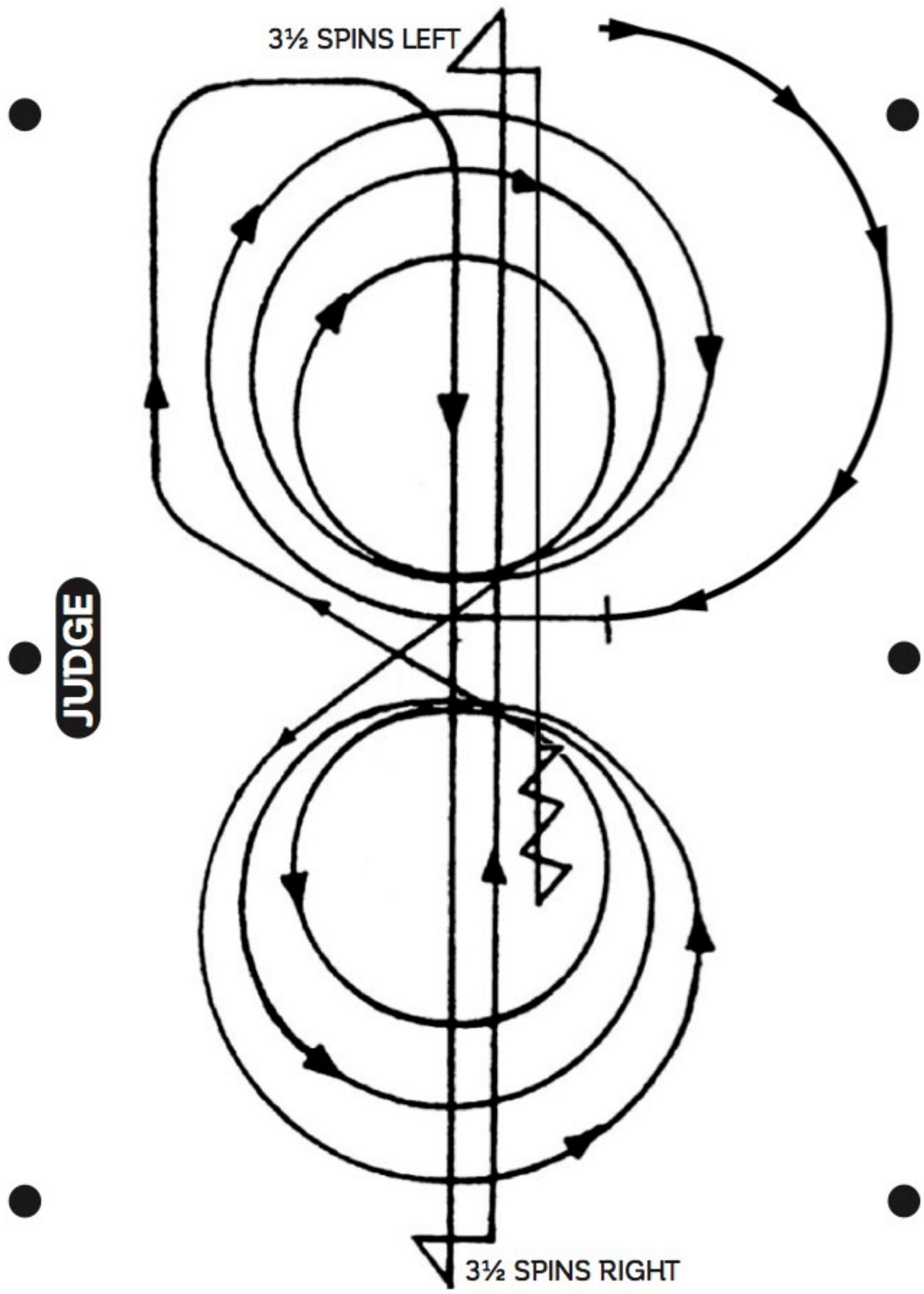

Begin on right lead. At the center, without stopping or breaking gait, begin pattern facing toward the judge. Refer to rule 20.6.

1. Begin on right lead complete three circles to right, two large fast circles followed by one small and slow circle, change to left lead.
2. Complete three circles to left, two large fast circles followed by one small and slow circle. Change to right lead.
3. Continue loping around end of arena without breaking gait. Run up center of arena to far end past the end marker and come to a sliding stop.
4. Complete 3½ spins to the right.
5. Run up center of arena past the end marker, and come to a sliding stop.
6. Complete 3½ spins to the left.
7. Run back to middle of the arena past the center marker and come to a sliding stop. Back at least 10 feet in a straight line. Hesitate to complete pattern.

NRCHA
NATIONAL REINED COW HORSE ASSOCIATION

PATTERN 12

May be used for NHSRA Events **LOPE TOWARD**

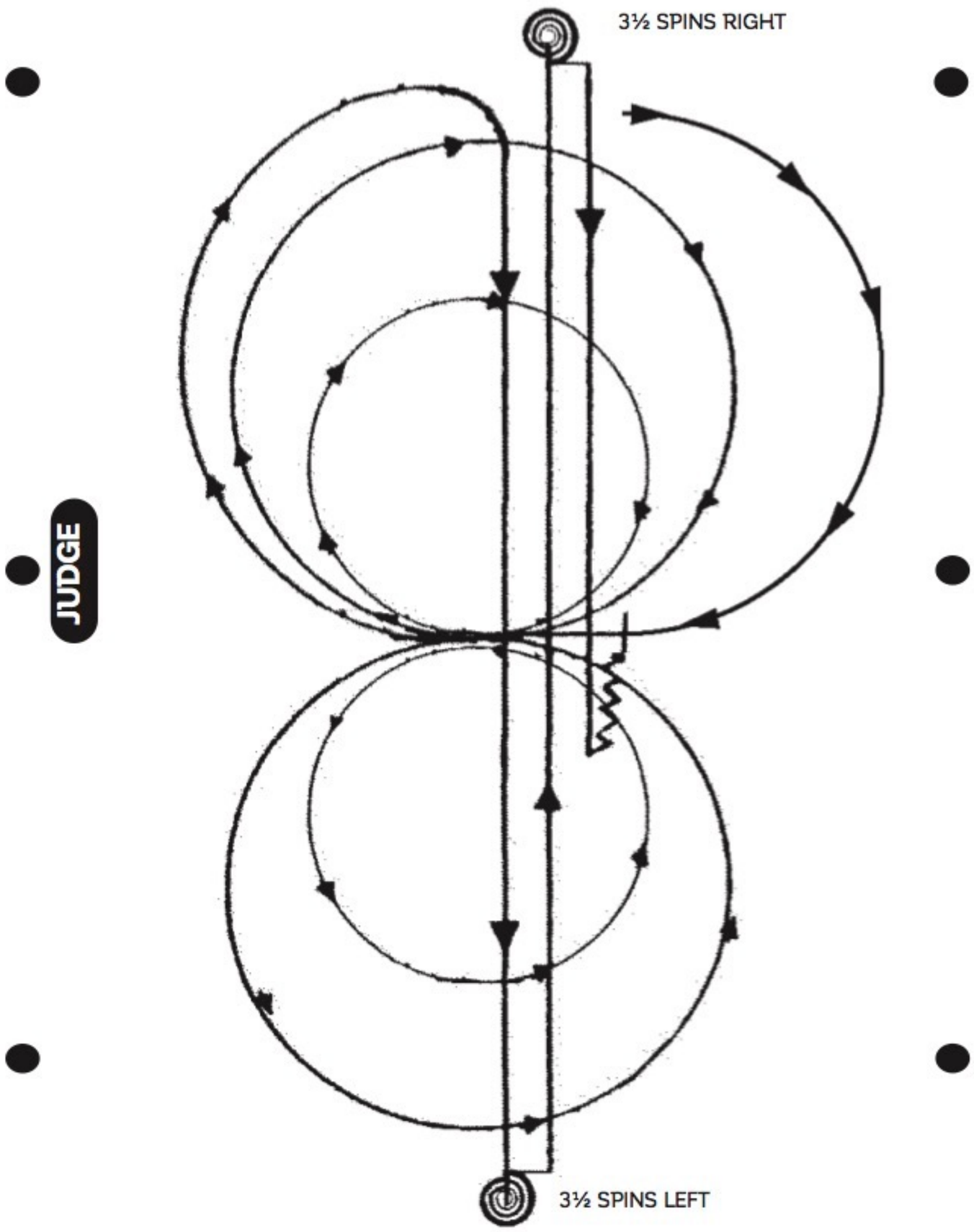

Begin on right lead. At the center, without stopping or breaking gait, begin pattern facing toward the judge. Refer to rule 20.6.

1. Beginning on the right lead complete two circles to the right, the first circle large and fast, and the second circle small and slow. Change leads at the center of the arena.
2. Complete two circles to the left, the first circle large and fast, and the second circle small and slow. Change leads at the center of the arena.
3. Continue around end of arena without breaking gait or changing leads, run down center of the arena past the end marker, execute a square sliding stop.
4. Complete 3½ spins to the left.
5. Run down center of arena past end marker, execute a square sliding stop.
6. Complete 3½ spins to the right.
7. Run down center of arena past center marker, execute a square sliding stop. Back at least 10 feet. Hesitate to complete pattern.